Intel® RAID Smart Battery AXXRSBBU6

Technical Product Specification

Intel order number E36068-001

Revision 1.0

February 2008

Enterprise Platforms and Services Marketing

Revision History

Date	Revision Number	Modifications
February 2008	1.0	initial Release

Disclaimers

INFORMATION IN THIS DOCUMENT IS PROVIDED IN CONNECTION WITH INTEL® PRODUCTS. NO LICENSE, EXPRESS OR IMPLIED, BY ESTOPPEL OR OTHERWISE, TO ANY INTELLECTUAL PROPERTY RIGHTS IS GRANTED BY THIS DOCUMENT. EXCEPT AS PROVIDED IN INTEL'S TERMS AND CONDITIONS OF SALE FOR SUCH PRODUCTS, INTEL ASSUMES NO LIABILITY WHATSOEVER, AND INTEL DISCLAIMS ANY EXPRESS OR IMPLIED WARRANTY, RELATING TO SALE AND/OR USE OF INTEL PRODUCTS INCLUDING LIABILITY OR WARRANTIES RELATING TO FITNESS FOR A PARTICULAR PURPOSE, MERCHANTABILITY, OR INFRINGEMENT OF ANY PATENT, COPYRIGHT OR OTHER INTELLECTUAL PROPERTY RIGHT. Intel products are not intended for use in medical, life saving, life sustaining, critical control or safety systems, or in nuclear facility applications.

Intel might change specifications and product descriptions at any time, without notice.

Designers must not rely on the absence or characteristics of any features or instructions marked "reserved" or "undefined." Intel reserves these for future definition and shall have no responsibility whatsoever for conflicts or incompatibilities arising from future changes to them.

The Intel® RAID Smart Battery AXXRSBBU6 may contain design defects or errors known as errata which may cause the product to deviate from published specifications. Current characterized errata are available on request.

Intel is a trademark or registered trademark of Intel Corporation or its subsidiaries in the United States and other countries.

*Other names and brands may be claimed as the property of others.

Copyright © 2008, Intel Corporation, Portions Copyright LSI Logic, Inc.

Table of Contents

1. Overview 1
2. Hardware 3
2.1 Electrical and Mechanical Details 3
2.2 Functional Block Diagram 4
2.3 Board-to-board connector 4
2.4 In-Line connector 5
2.5 Smart Refresh Circuit Board 6
2.6 Connector Cable 7
2.7 Battery Pack 7
2.7.1 Battery States 7
3. RAID Firmware Interaction 9
4. Software 10
4.1 Intel® RAID BIOS Console 2 10
4.2 Intel® RAID Web Console 2 10
4.3 Intel® RAID Command Line Tool 2 Utility 10

List of Figures

Figure 1. Intel® RAID Smart Battery AXXRSBBU6 1
Figure 2. Block Diagram 4

List of Tables

Table 1. Electrical and Mechanical Details 3
Table 2. Board-to-Board Interface Connector Pin-out 4
Table 3. In-Line Connector Pin-out 5
Table 4. Connector Pin-outs 7

< This page intentionally left blank. >

1. Overview

This document describes the key hardware components, firmware, and software utilities for the Intel® RAID Smart Battery AXXRSBBU6. The Smart Battery AXXRSBBU6 ensures data integrity for the RAID solution by ensuring that the data passing through the cache is written to the hard drives.

The Smart Battery supports RAID controllers that use a standard 128 MB or 256 MB DDR2 DIMM. It is available as an accessory for selected RAID controllers.

Intel® RAID Smart Battery AXXRSBBU6 contains the following components:

- Board-to-board connector: The AXXRSBBU6 can connect to the base controller through the connector as a daughter card to the base controller.
- Smart Refresh Circuit board: Ensures that the battery is maintained at optimal performance and charge levels. This circuit is based on the Texas Instruments bq2060A SBS v1.1-Compliant Gas Gauge IC.
- 5-pin connector cable: Allows communication between the Smart Refresh Circuit board and the battery pack
- Battery pack: Includes a circuit logic board and attached Li-ion batteries. The logic board provides sensing and management logic to support the battery charge, discharge, and monitoring functionality.
- Software: Notifies the user of failures or corrective actions. Monitoring is accomplished through the Intel® RAID BIOS Console 2, Intel® RAID Web Console 2, or command line Tool 2 utilities.

Figure 1. Intel® RAID Smart Battery AXXRSBBU6

The battery pack charges automatically and communicates battery status information, such as voltage, temperature, and current, to the host computer system.

Because it is faster to write data to the RAID adapter's cache memory than it is to write it directly to a storage device, data is first written to the cache memory. These write operations complete quickly at the software application level. The RAID controller then writes the cached data to the storage device when system activity is low or when the cache is full.

This method of writing data carries a risk. Cached data on the RAID controller can be lost if the AC power fails before it is written to the storage device. The Smart Battery mitigates this risk by providing battery power to the RAID controller if AC power is lost.

The Smart Battery monitors the voltage level of the DRAM modules on the RAID controller. If the voltage drops below a defined level, the Smart Battery switches the memory power source from the RAID controller to the battery pack. The battery pack provides power for the memory until the voltage returns to an acceptable level, at which time the Smart Battery circuit board switches the power source back to the RAID controller. Cached data is then written to the storage devices with no loss of data. The Smart Battery provides additional fault tolerance when used with a UPS.

The battery pack cache-memory hold time depends on the size and configuration of the RAID controller memory. Retention time depends on memory capacity and the number of memory components on the DIMM to support the capacity. Estimated battery backup retention time is 72 hours.

2. Hardware

2.1 Electrical and Mechanical Details

Table 1. Electrical and Mechanical Details

Feature	Description
Data retention	Up to 72 hours
Chemistry	Li-ion
Dimensions	Maximum 2.611 inches by 2.122 inches
Weight	1.4 oz typical with battery pack
Operating temperature	10 to 45 degrees Celsius
Operating humidity	20% - 80 %, non-condensing
Storage temperature	Greater than 90 days at 0 to 30 degrees Celsius 30 to 90 days at 30 to 40 degrees Celsius Less than 30 days at 40 to 50 degrees Celsius
Storage humidity	5% - 90 %, non-condensing
Capacity	700 mAH
Voltages	Nominal OCV: 3.7 V
Current draw	Battery logic (1.15mA) +12 V rail, 200 mA when pack is charging +12 V rail, 3.0 mA when pack is not charging +3.3 V rail, 140 uA constant
Fast charge current	512 mAH
Maintenance charge rate	100 mAH
Battery voltage conditioning	Less than 3.01 V
Battery charge time	Typical: ~6 hours to charge from 3.01V OCV to 5.5V OCV Worst case: 8 hours if pack is completely depleted of charge
MTBF (Electrical Components)	2,490,772 hours at 40 degrees Celsius
Battery shelf life	1 year
Battery operational life	500 recharges cycles Note: Intel recommends replacing the battery yearly

2.2 Functional Block Diagram

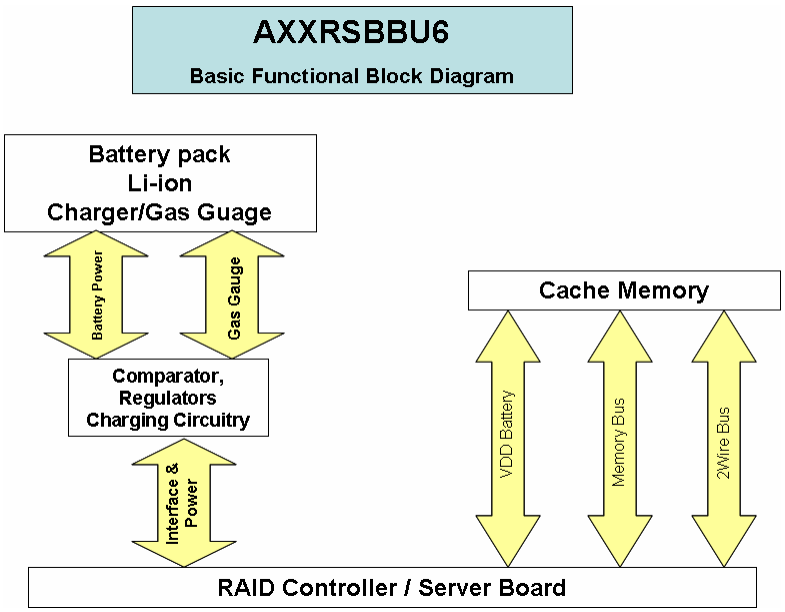

Figure 2. Block Diagram

2.3 Board-to-board connector

The Smart Battery can be mounted as a daughter card through the 20-pin board-to-board connector to the RAID controller. The follow RAID Controllers are supported:

- Intel® Server RAID Controller SRCSASBB8I
- Intel® Server RAID Controller SRCSASLS4I

Table 2. Board-to-Board Interface Connector Pin-out

Pin	Signal Name	Signal Type
1	VBB_DDR_MEM	Output
2	GND	GND
3	+12 V	Input
4	GND	GND
5	PFAIL#	Output
6	BBEN	Input
7	+1.8V	Input
8	SPARE	N/A
9	3.3v_AUX	Input
10	GND	GND
11	GND	GND
12	+3.3V	Input
13	SCL	Input / output
14	GND	GND

15	SDA	Input / output
16	BBSTATUS	Output
17	GND	GND
18	BBSTROBE	Input
19	GND	Input
20	VBB_DRR_MEM	Output

2.4 In-Line connector

The 20-pin In-Line connector is reserved by factory use only.

Table 3. In-Line Connector Pin-out

Pin	Signal Name	Signal Type
1	+12 V	Input
2	GND	GND
3	SPARE	N/A
4	GND	GND
5	+1.8V	Input
6	GND	GND
7	+3.3V	Input
8	GND	GND
9	VBB_1.8V	Output
10	GND	GND
11	AUXPWR_3.3V	Input
12	GND	GND
13	SCL	Input / output
14	GND	GND
15	SDA	Input / output
16	PFAIL#	Output
17	SPARE	N/A
18	XD0_BBE	Input
19	BBSTROBE	Output
20	BBSTATUS	Output

2.5 Smart Refresh Circuit Board

The Intel® RAID Smart Battery AXXRSBBU6 is based on the Texas Instruments bq2060A SBS v1.1-compliant Gas Gauge IC. The key features of the SBS v1.1 IC are:

- Provides accurate measurement of available charge
- Supports SBS Smart Battery Data Specification v1.1
- Reports voltages
- Provides voltage, temperature, and current measurements
- Measures charge flow using a V-to-F converter with offset of less than 16µV after calibration

The bq2060A SBS-compliant Gas Gauge IC for battery pack maintains an accurate record of the available charge. It determines battery capacity by monitoring the amount of charge input or removed from a rechargeable battery.

The bq2060A measures battery voltage, temperature, and current, estimates battery self-discharge, and monitors the battery for low-voltage thresholds. It measures charge and discharge activity by monitoring the voltage across a small-value series sense resistor between the battery's negative terminal and the negative terminal of the battery pack. The available battery charge is determined by monitoring this voltage and correcting the measurement for environmental and operating conditions.

For more information about the Texas Instruments bq2060A SBS v1.1-compliant Gas Gauge IC, refer to the manufacturer Web site.

The Intel® RAID Smart Battery AXXRSBBU6 features are reviewed below.

- Integrates into the battery back
- Reduces host CPU intervention
- Shares I^2C bus with the onboard EEPROM for memory
- Provides real-time battery status information
- Displays Low charge warning
- Provides instantaneous voltage, current, and temperature information
- Supplies battery charge percentage remaining and at-rate information
- Broadcasts event alarms to the host:
  - Out-of-temperature
  - Terminate charge
  - Terminate discharge
  - Low capacity
- Displays manufacturing information
- Provides Smart Charger Protocol for improved battery maintenance, calibration, and charging performance

2.6 Connector Cable

A 5-pin connector cable connects the battery pack to the Smart Battery circuit board.

Table 4. Connector Pin-outs

Pin	Signal Name	Description
1	VBATP	Positive terminal of the PACK
2	THERMISTOR SENSE	Sense contact of the thermistor
3	GND	Negative terminal of the PACK
4	SCL	Clock for PACK monitoring
5	SDA	Data for PACK monitoring

2.7 Battery Pack

The cache-memory hold time depends on the size and configuration of the RAID controller memory. Retention time varies depending on memory capacity and the number of memory components used on the DIMM to support that capacity. Estimates for battery backup retention time with different configurations of DDR2 memory are listed below.

- 256 MB (256 Mb devices) = 46 hours
- 512 MB (256 Mb devices) = 23 hours
- 512 MB (512 Mb devices) = 46 hours

2.7.1 Battery States

The battery pack includes battery sensing logic that senses the battery voltage levels and recognizes the battery state.

2.7.1.1 Initialized State

The battery is in the initialized state during a normal power-up sequence. In RAID firmware, there are two times when initialization occurs:

- During boot loader execution
- During RAID firmware boot

2.7.1.2 Discharging State

The battery voltage is drained as part of a relearn cycle.

2.7.1.3 Fully Charged State

A battery that is not fully charged has a low-voltage level that indicates the level of charge. Charging begins when the battery logic detects low voltage and power is supplied.

Once a new battery is fully charged, a relearn cycle is initiated. Relearn is the process of taking a fully charged battery through discharge-charge cycle to update the gas gauge capacity

parameters. The relearn cycle takes up to 24 hours to fully-discharge and recharge the battery pack. After the relearn cycle is completed, information from the battery accurately provides the state of charge, capacity, and other parameters. These parameters determine the health of the battery.

- The relearn cycle can be set at a user-definable interval. The default is a one-month (30-day) interval.
- A relearn cycle initiates on a newly-inserted battery, even if the battery was previously fully charged.
- Some applications can start a relearn, or a relearn can be manually started.

2.7.1.4 Fully-discharged State

The fully-discharged state is detected as a low voltage parameter. The charger detects a fully-discharged battery state and starts charging the cells when sufficient power is available; and when the firmware has finished initializing the battery pack.

3. RAID Firmware Interaction

RAID firmware detects the battery status and logs the following events:

- Battery present
- Battery not present
- New battery detected
- Battery has been replaced
- Battery temperature is high
- Battery voltage is low
- Battery is charging
- Battery is discharging
- Battery voltage is normal
- Battery needs replacement: SOH bad
- Battery needs replacement: 3 years old
- Battery needs replacement: Charger is not working
- Relearn started
- Relearn in progress
- Relearn completed
- Relearn timed out
- Relearn pending: Battery is charging
- Relearn post phoned
- Relearn will start in 4 days
- Relearn will start in 2 days
- Relearn will start in 1 day
- Relearn will start in 5 hours

4. Software

4.1 Intel® RAID BIOS Console 2

The system BIOS loads the RAID option ROM that is resident on the RAID controller flash. Run this utility by pressing <Ctrl> + <G> when prompted during POST. The option ROM checks for the presence of the battery and informs the user if the battery is missing or not fully charged. The RAID BIOS Console Utility can be used to monitor charge cycle count and voltage levels.

4.2 Intel® RAID Web Console 2

This is an operating system based utility for the Microsoft Windows* and Linux* operating systems that are supported by the RAID solution being used. This utility can be used to monitor battery status, charge level, and the number of recharge cycles.

4.3 Intel® RAID Command Line Tool 2 Utility

This text-based command-line utility is available for Windows* and Linux* operating systems. It can be use to view battery status and to initiate a relearn.