DLT Drive Upgrade Kit

Kit Contents

This upgrade kit contains the following:

Item	Quantity
Right side bracket	1
Left side bracket	1
M3x5mm screws (install side brackets)	4
Bottom (CD-ROM) bracket	1
M2x2.5mm screws (install CD-ROM)	4
6-32 hex head screws	12
This manual	1

DLT Drive Installation

1. If desired, install a slimline CD-ROM drive in the bottom bracket.
2. Lay the DLT drive on its top. Attach the side brackets to the DLT drive. Brackets are labeled “Left” and “Right” and attach using two screws. Attach the bottom bracket to the DLT drive using four screws.

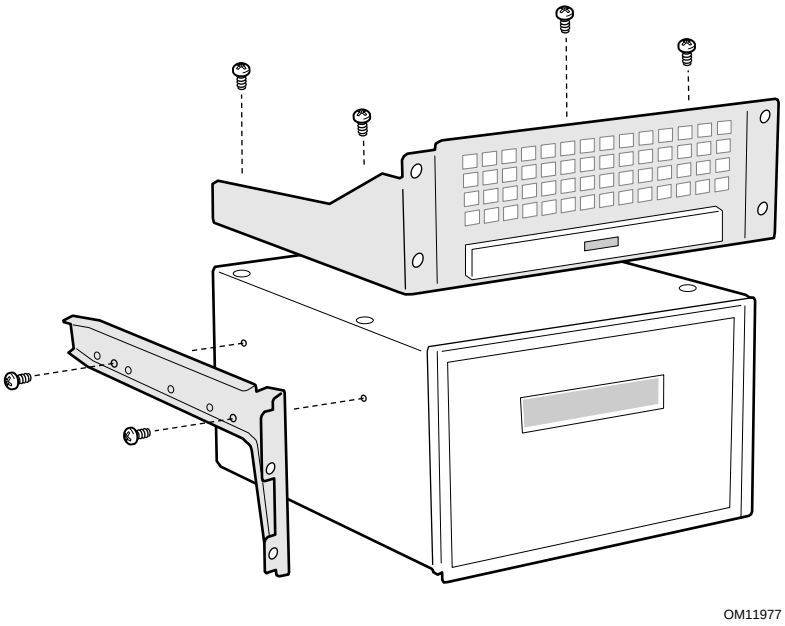

Figure 1. Attaching Brackets to the DLT Drive

3. If installed, remove any 5 ¼-inch drives in the upper drive bay of your chassis.
4. Remove the EMI shields from the three upper drive bays. Remove the smaller (1-inch) EMI filler panel.

 Copyright © 2001 Intel Corporation. All rights reserved.

5. Slide the DLT drive assembly into the chassis. Secure to chassis using the eight screws removed in steps 3 and 4.
6. Connect power and data cables to the drive.

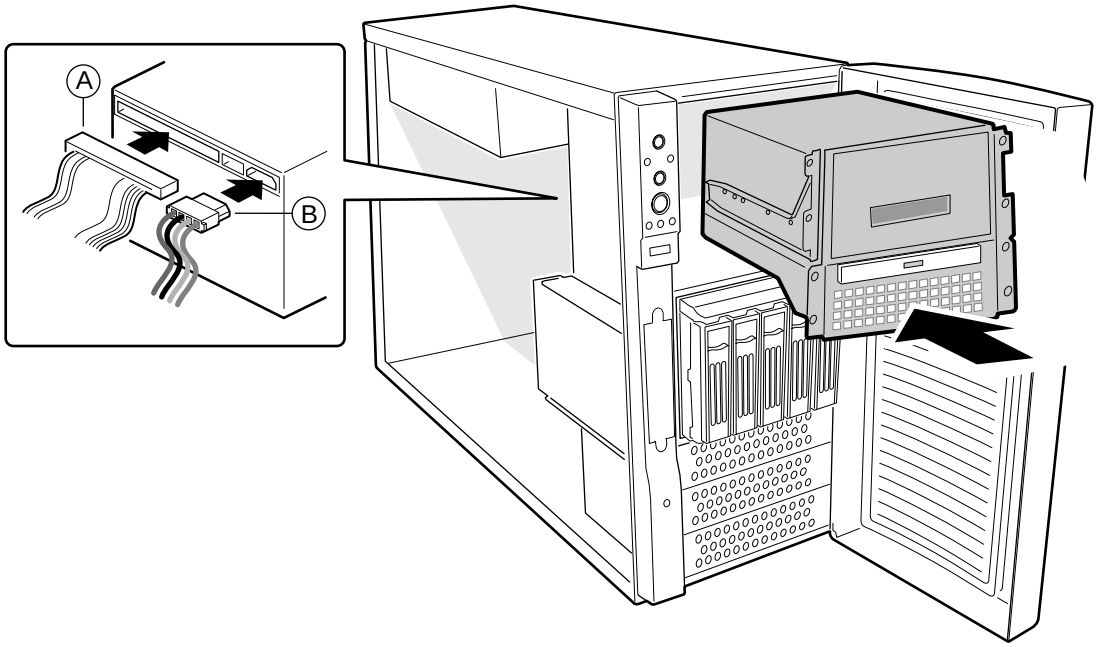

Figure 2. Installing the DLT Drive

Intel is a registered trademark of Intel Corporation or its subsidiaries in the United States and other countries.